SPIN-X (776SEK-TS) Clothes Dryer

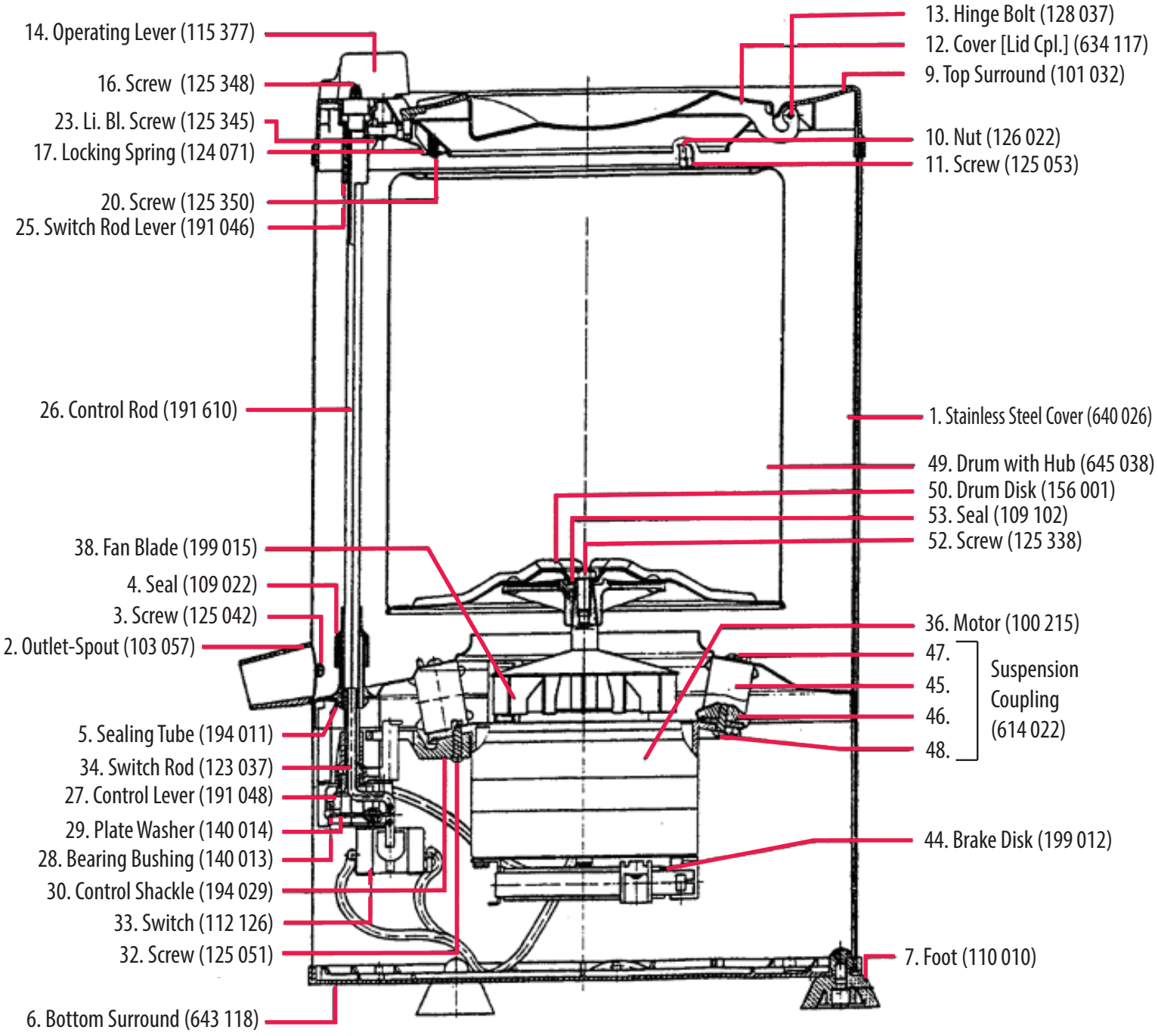

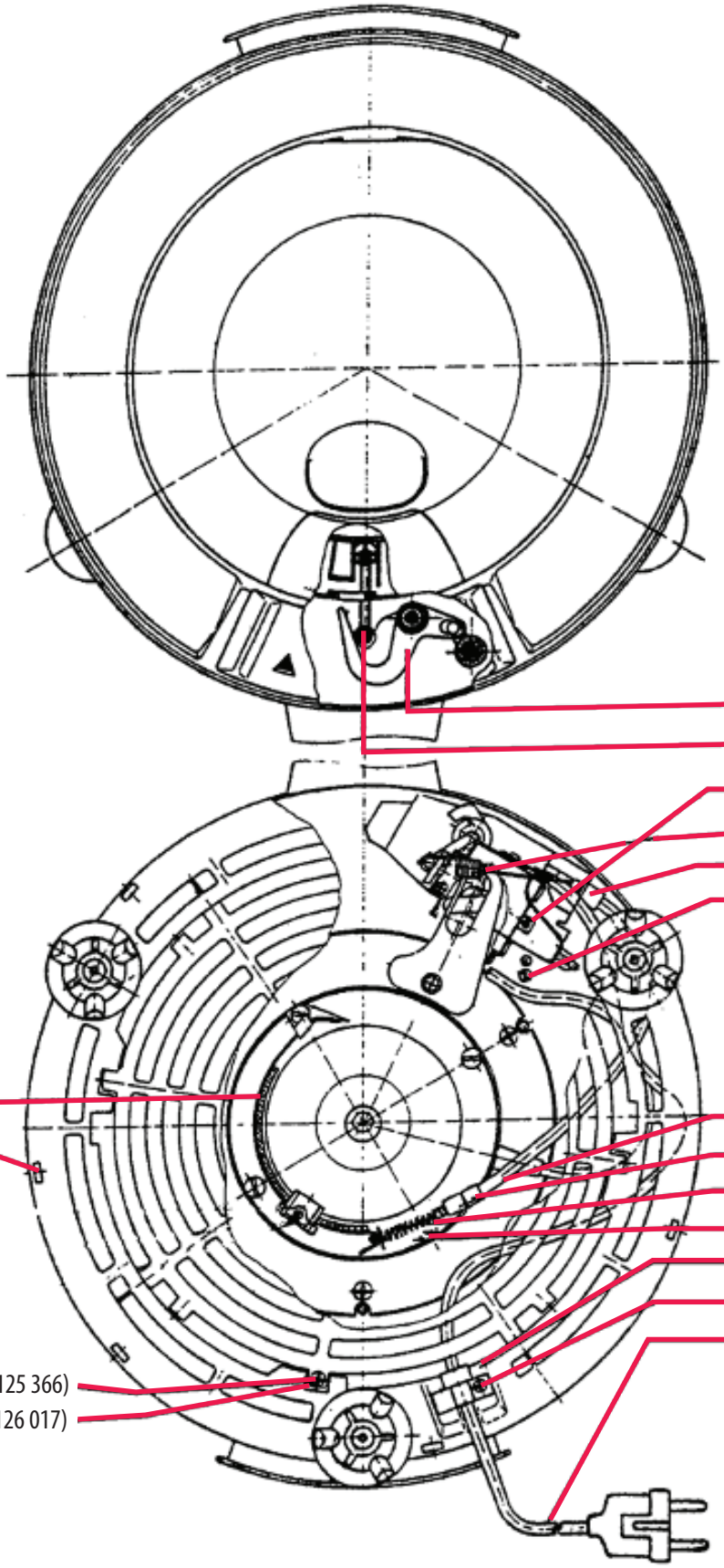
21. Lock Catch (191 047)
18. Lock Pin (128 038)
99. Screw (125 155)
35. Tension Spring (124 022)
40. Guide Bushing (140 003)
55. Screw (125 276)
37. Brake Band (199 003)
54. V-Clamp (124 021)
39. Bowden Cable (614 023)
40. Guide Bushing (140 003)
42. Compressing Spring (124 074)
43. Screw (192 299 / 125 339)
57. Strain Relief Schackle (191 289)
58. Screw (125 326)
59. Power Cord, NEMA, Black (119 079)
63. Screw (125 366)
64. Nut (126 017)